UNIVERSITY OF CAMBRIDGE INTERNATIONAL EXAMINATIONS
General Certificate of Education Advanced Level

CANDIDATE NAME									
CENTRE NUMBER						CANDIDATE NUMBER				

8358883018

PHYSICS **9702/43**

Paper 4 A2 Structured Questions **May/June 2011**

2 hours

Candidates answer on the Question Paper.

No Additional Materials are required.

READ THESE INSTRUCTIONS FIRST

Write your Centre number, candidate number and name on all the work you hand in.
Write in dark blue or black pen.
You may use a soft pencil for any diagrams, graphs or rough working.
Do not use staples, paper clips, highlighters, glue or correction fluid.
DO **NOT** WRITE IN ANY BARCODES.

Answer **all** questions.
You may lose marks if you do not show your working or if you do not use appropriate units.

At the end of the examination, fasten all your work securely together.
The number of marks is given in brackets [ ] at the end of each question or part question.

For Examiner's Use	
1	
2	
3	
4	
5	
6	
7	
8	
9	
10	
11	
12	
Total	

This document consists of **23** printed pages and **1** blank page.

© UCLES 2011

Data

speed of light in free space,	$c = 3.00 \times 10^{8}\ \text{m s}^{-1}$
permeability of free space,	$\mu_0 = 4\pi \times 10^{-7}\ \text{H m}^{-1}$
permittivity of free space,	$\varepsilon_0 = 8.85 \times 10^{-12}\ \text{F m}^{-1}$
elementary charge,	$e = 1.60 \times 10^{-19}\ \text{C}$
the Planck constant,	$h = 6.63 \times 10^{-34}\ \text{J s}$
unified atomic mass constant,	$u = 1.66 \times 10^{-27}\ \text{kg}$
rest mass of electron,	$m_e = 9.11 \times 10^{-31}\ \text{kg}$
rest mass of proton,	$m_p = 1.67 \times 10^{-27}\ \text{kg}$
molar gas constant,	$R = 8.31\ \text{J K}^{-1}\ \text{mol}^{-1}$
the Avogadro constant,	$N_A = 6.02 \times 10^{23}\ \text{mol}^{-1}$
the Boltzmann constant,	$k = 1.38 \times 10^{-23}\ \text{J K}^{-1}$
gravitational constant,	$G = 6.67 \times 10^{-11}\ \text{N m}^2\ \text{kg}^{-2}$
acceleration of free fall,	$g = 9.81\ \text{m s}^{-2}$

© UCLES 2011

Formulae

uniformly accelerated motion, $s = ut + \frac{1}{2}at^2$
$v^2 = u^2 + 2as$

work done on/by a gas, $W = p\Delta V$

gravitational potential, $\phi = -\frac{Gm}{r}$

hydrostatic pressure, $p = \rho gh$

pressure of an ideal gas, $p = \frac{1}{3}\frac{Nm}{V}\langle c^2 \rangle$

simple harmonic motion, $a = -\omega^2 x$

velocity of particle in s.h.m., $v = v_0 \cos \omega t$
$v = \pm \omega \sqrt{(x_0^2 - x^2)}$

electric potential, $V = \frac{Q}{4\pi\varepsilon_0 r}$

capacitors in series, $1/C = 1/C_1 + 1/C_2 + \ldots$

capacitors in parallel, $C = C_1 + C_2 + \ldots$

energy of charged capacitor, $W = \frac{1}{2}QV$

resistors in series, $R = R_1 + R_2 + \ldots$

resistors in parallel, $1/R = 1/R_1 + 1/R_2 + \ldots$

alternating current/voltage, $x = x_0 \sin \omega t$

radioactive decay, $x = x_0 \exp(-\lambda t)$

decay constant, $\lambda = \frac{0.693}{t_{\frac{1}{2}}}$

© UCLES 2011

[Turn over

Section A

For Examiner's Use

Answer **all** the questions in the spaces provided.

1 **(a)** State what is meant by a *field of force*.

.....

..... [1]

(b) Gravitational fields and electric fields are two examples of fields of force.
State one similarity and one difference between these two fields of force.

similarity: .....

.....

difference: .....

.....

.....
[3]

(c) Two protons are isolated in space. Their centres are separated by a distance R.
Each proton may be considered to be a point mass with point charge.
Determine the magnitude of the ratio

$$\frac{\text{force between protons due to electric field}}{\text{force between protons due to gravitational field}}.$$

ratio = ... [3]

© UCLES 2011

2 **(a)** State what is meant by a *mole*.

For Examiner's Use

.....

.....

..... [2]

(b) Two containers A and B are joined by a tube of negligible volume, as illustrated in Fig. 2.1.

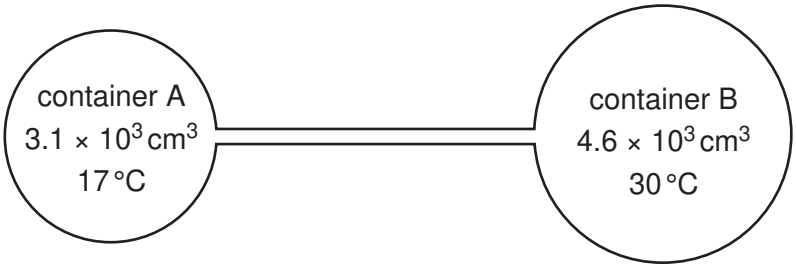

Fig. 2.1

The containers are filled with an ideal gas at a pressure of 2.3×10^5 Pa.
The gas in container A has volume 3.1×10^3 cm^3 and is at a temperature of 17 °C.
The gas in container B has volume 4.6×10^3 cm^3 and is at a temperature of 30 °C.

Calculate the total amount of gas, in mol, in the containers.

amount = ... mol [4]

3 A capacitor consists of two metal plates separated by an insulator, as shown in Fig. 3.1.

For Examiner's Use

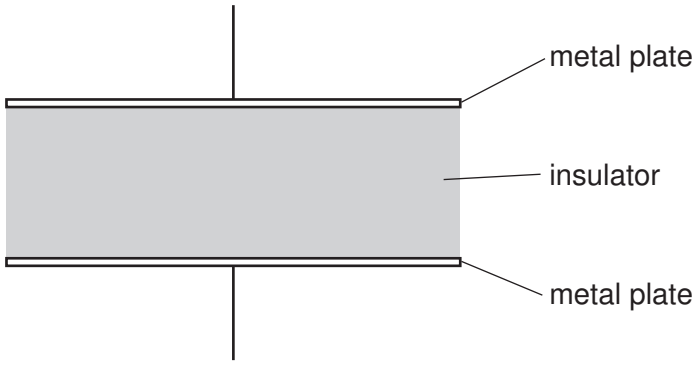

Fig. 3.1

The potential difference between the plates is V. The variation with V of the magnitude of the charge Q on one plate is shown in Fig. 3.2.

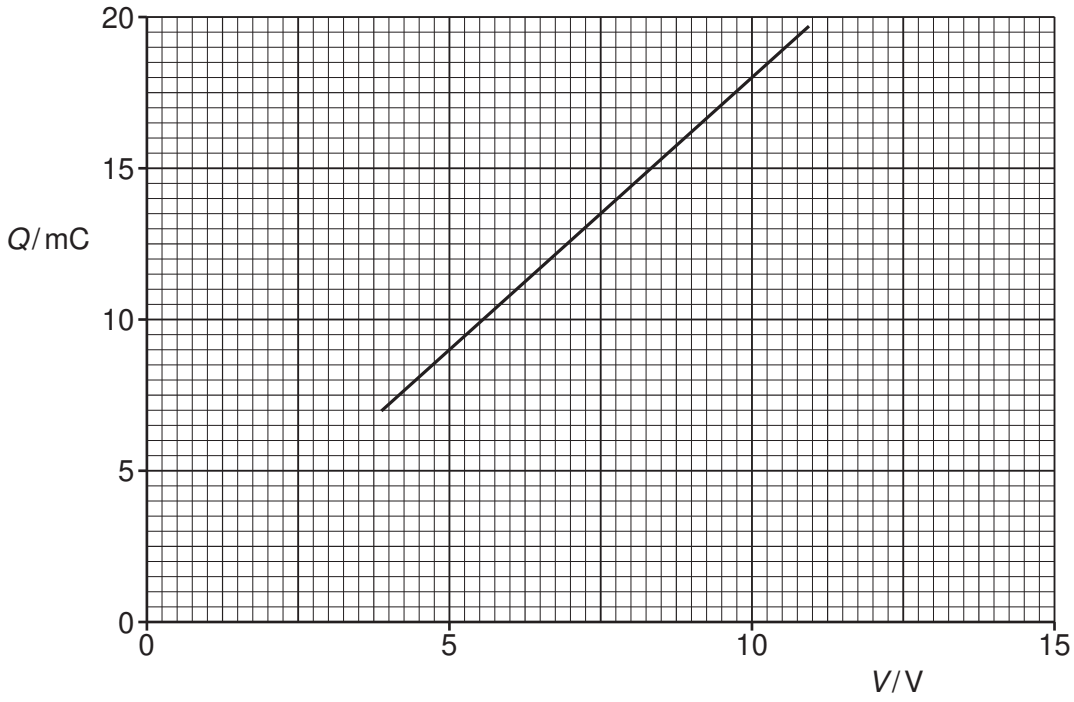

Fig. 3.2

(a) Explain why the capacitor stores energy but not charge.

.....

.....

.....

..... [3]

(b) Use Fig. 3.2 to determine

For Examiner's Use

(i) the capacitance of the capacitor,

capacitance = ... μF [2]

(ii) the loss in energy stored in the capacitor when the potential difference V is reduced from 10.0 V to 7.5 V.

energy = ... mJ [2]

(c) Three capacitors X, Y and Z, each of capacitance 10 μF, are connected as shown in Fig. 3.3.

For Examiner's Use

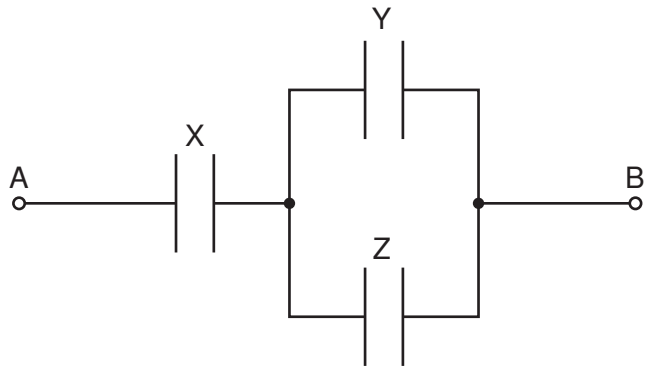

Fig. 3.3

Initially, the capacitors are uncharged.
A potential difference of 12 V is applied between points A and B.
Determine the magnitude of the charge on one plate of capacitor X.

charge = ... μC [3]

© UCLES 2011

For Examiner's Use

4 **(a)** The first law of thermodynamics may be expressed in the form

$$\Delta U = q + w.$$

Explain the symbols in this expression.

+ ΔU .....

+ q .....

+ w .....

[3]

(b) **(i)** State what is meant by *specific latent heat*.

.....

.....

.....

..... [3]

(ii) Use the first law of thermodynamics to explain why the specific latent heat of vaporisation is greater than the specific latent heat of fusion for a particular substance.

.....

.....

.....

..... [3]

© UCLES 2011

[Turn over

5 A bar magnet is suspended vertically from the free end of a helical spring, as shown in Fig. 5.1.

For Examiner's Use

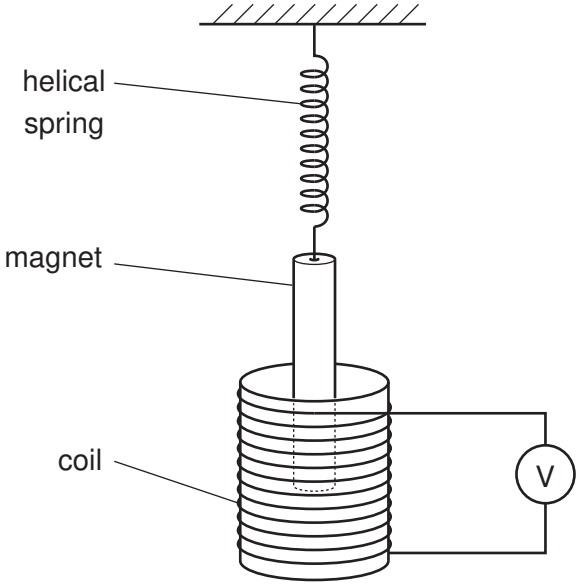

Fig. 5.1

One pole of the magnet is situated in a coil. The coil is connected in series with a high-resistance voltmeter.
The magnet is displaced vertically and then released.
The variation with time t of the reading V of the voltmeter is shown in Fig. 5.2.

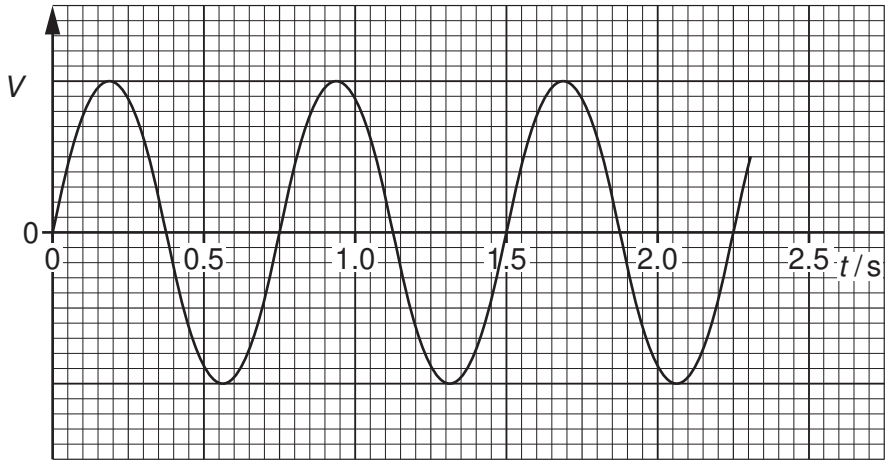

Fig. 5.2

(a) (i) State Faraday's law of electromagnetic induction.

.....

.....

..... [2]

For Examiner's Use

(ii) Use Faraday's law to explain why

1. there is a reading on the voltmeter,

.....

..... [1]

2. this reading varies in magnitude,

.....

..... [1]

3. the reading has both positive and negative values.

.....

..... [1]

(b) Use Fig. 5.2 to determine the frequency f_0 of the oscillations of the magnet.

f_0 = ... Hz [2]

(c) The magnet is now brought to rest and the voltmeter is replaced by a variable frequency alternating current supply that produces a constant r.m.s. current in the coil.
The frequency of the supply is gradually increased from $0.7\,f_0$ to $1.3\,f_0$, where f_0 is the frequency calculated in **(b)**.
On the axes of Fig. 5.3, sketch a graph to show the variation with frequency f of the amplitude A of the new oscillations of the bar magnet.

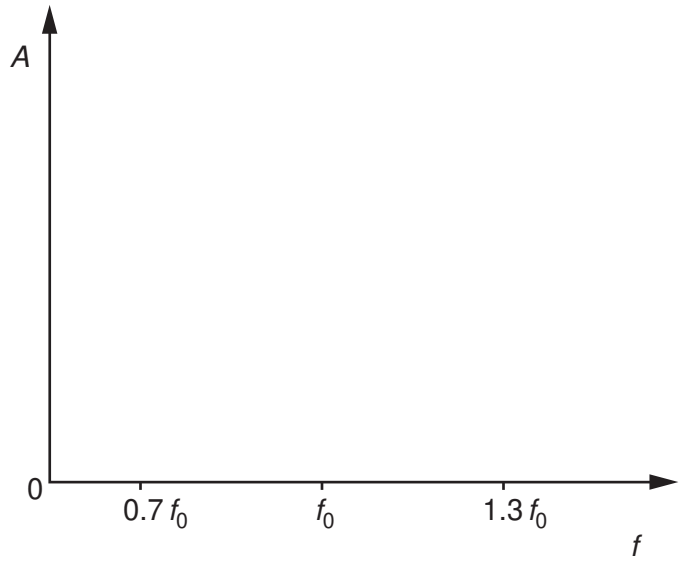

[2]

Fig. 5.3

(d) (i) Name the phenomenon illustrated on your completed graph of Fig. 5.3.

..... [1]

For Examiner's Use

(ii) State one situation where the phenomenon named in **(i)** is useful.

.....

..... [1]

© UCLES 2011

BLANK PAGE

Please turn over for Question 6.

6 An alternating current supply is connected in series with a resistor R, as shown in Fig. 6.1.

For Examiner's Use

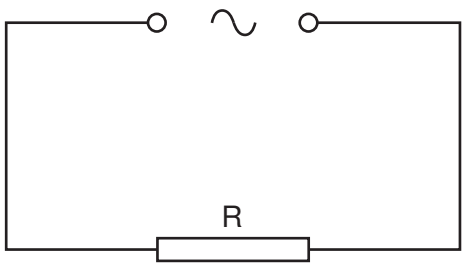

Fig. 6.1

The variation with time t (measured in seconds) of the current I (measured in amps) in the resistor is given by the expression

$$I = 9.9\sin(380t).$$

(a) For the current in the resistor R, determine

(i) the frequency,

frequency = ... Hz [2]

(ii) the r.m.s. current.

r.m.s. current = ... A [2]

© UCLES 2011

(b) To prevent over-heating, the mean power dissipated in resistor R must not exceed 400 W.
Calculate the minimum resistance of R.

For Examiner's Use

resistance = ... Ω [2]

7 **(a)** State what is meant by the *de Broglie wavelength*.

For Examiner's Use

.....

.....

..... [2]

(b) An electron is accelerated in a vacuum from rest through a potential difference of 850 V.

(i) Show that the final momentum of the electron is 1.6×10^{-23} N s.

[2]

(ii) Calculate the de Broglie wavelength of this electron.

wavelength = ... m [2]

(c) Describe an experiment to demonstrate the wave nature of electrons.
You may draw a diagram if you wish.

For Examiner's Use

.....

.....

.....

.....

.....

..... [5]

For Examiner's Use

8 **(a)** State what is meant by the *binding energy* of a nucleus.

.....

.....

..... [2]

(b) Show that the energy equivalence of 1.0 u is 930 MeV.

[3]

(c) Data for the masses of some particles and nuclei are given in Fig. 8.1.

	mass / u
proton	1.0073
neutron	1.0087
deuterium ($^{2}_{1}$H)	2.0141
zirconium ($^{97}_{40}$Zr)	97.0980

Fig. 8.1

Use data from Fig. 8.1 and information from **(b)** to determine, in MeV,

(i) the binding energy of deuterium,

binding energy = ... MeV [2]

(ii) the binding energy **per nucleon** of zirconium.

For Examiner's Use

binding energy per nucleon = ... MeV [3]

Section B

For Examiner's Use

Answer **all** the questions in the spaces provided.

9 **(a)** Describe the structure of a metal wire strain gauge. You may draw a diagram if you wish.

.....

.....

.....

..... [3]

(b) A strain gauge S is connected into the circuit of Fig. 9.1.

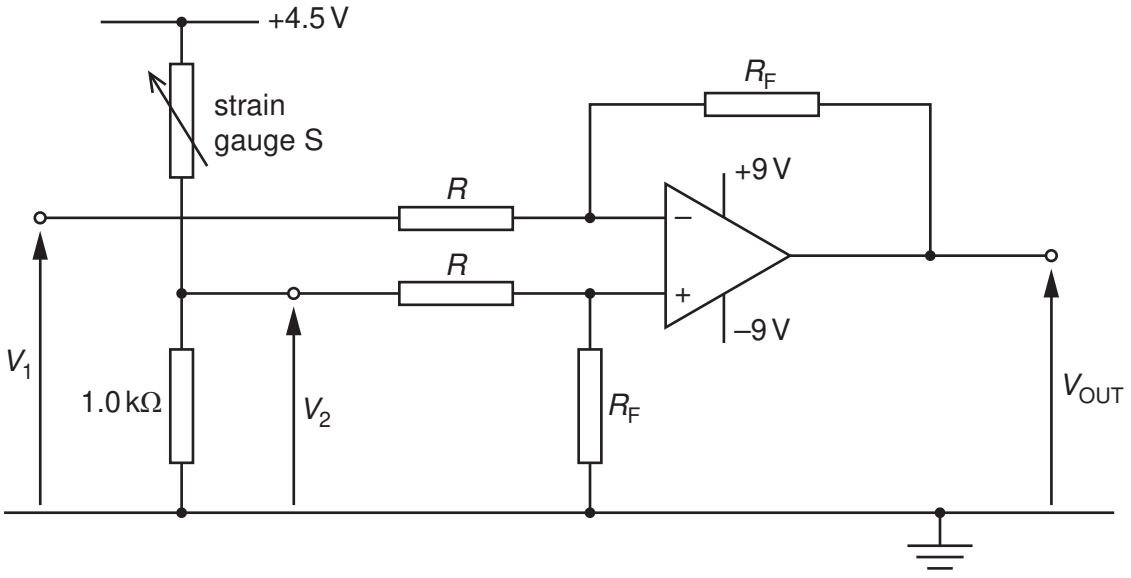

Fig. 9.1

The operational amplifier (op-amp) is ideal.
The output potential V_{OUT} of the circuit is given by the expression

$$V_{OUT} = \frac{R_F}{R} \times (V_2 - V_1).$$

(i) State the name given to the ratio $\frac{R_F}{R}$.

..... [1]

(ii) The strain gauge S has resistance 125 Ω when not under strain.
Calculate the magnitude of V_1 such that, when the strain gauge S is not strained, the output V_{OUT} is zero.

For Examiner's Use

V_1 = ... V [3]

(iii) In a particular test, the resistance of S increases to 128 Ω. V_1 is unchanged.
The ratio $\frac{R_F}{R}$ is 12.
Calculate the magnitude of V_{OUT}.

V_{OUT} = ... V [2]

10 Explain briefly the main principles of the use of magnetic resonance to obtain diagnostic information about internal body structures.

For Examiner's Use

.....

.....

.....

.....

.....

.....

.....

.....

.....

.....

..... [8]

11 The use of ionospheric reflection of radio waves for long-distance communication has, to a great extent, been replaced by satellite communication.

For Examiner's Use

(a) State and explain two reasons why this change has occurred.

1. .....

.....

.....

2. .....

.....

..... [4]

(b) The radio link between a geostationary satellite and Earth may be attenuated by as much as 190 dB.
Suggest why, as a result of this attenuation, the uplink and downlink frequencies must be different.

.....

.....

.....

..... [2]

For Examiner's Use

12 **(a)** The signal-to-noise ratio in an optic fibre must not fall below 24 dB. The average noise power in the fibre is 5.6×10^{-19} W.

(i) Calculate the minimum effective signal power in the optic fibre.

power = ... W [3]

(ii) The fibre has an attenuation per unit length of 1.9 dB km^{-1}.
Calculate the maximum uninterrupted length of fibre for an input signal of power 3.5 mW.

length = ... km [3]

(b) Suggest why infra-red radiation, rather than ultraviolet radiation, is used for long-distance communication using optic fibres.

.....

..... [1]

Permission to reproduce items where third-party owned material protected by copyright is included has been sought and cleared where possible. Every reasonable effort has been made by the publisher (UCLES) to trace copyright holders, but if any items requiring clearance have unwittingly been included, the publisher will be pleased to make amends at the earliest possible opportunity.

University of Cambridge International Examinations is part of the Cambridge Assessment Group. Cambridge Assessment is the brand name of University of Cambridge Local Examinations Syndicate (UCLES), which is itself a department of the University of Cambridge.

© UCLES 2011